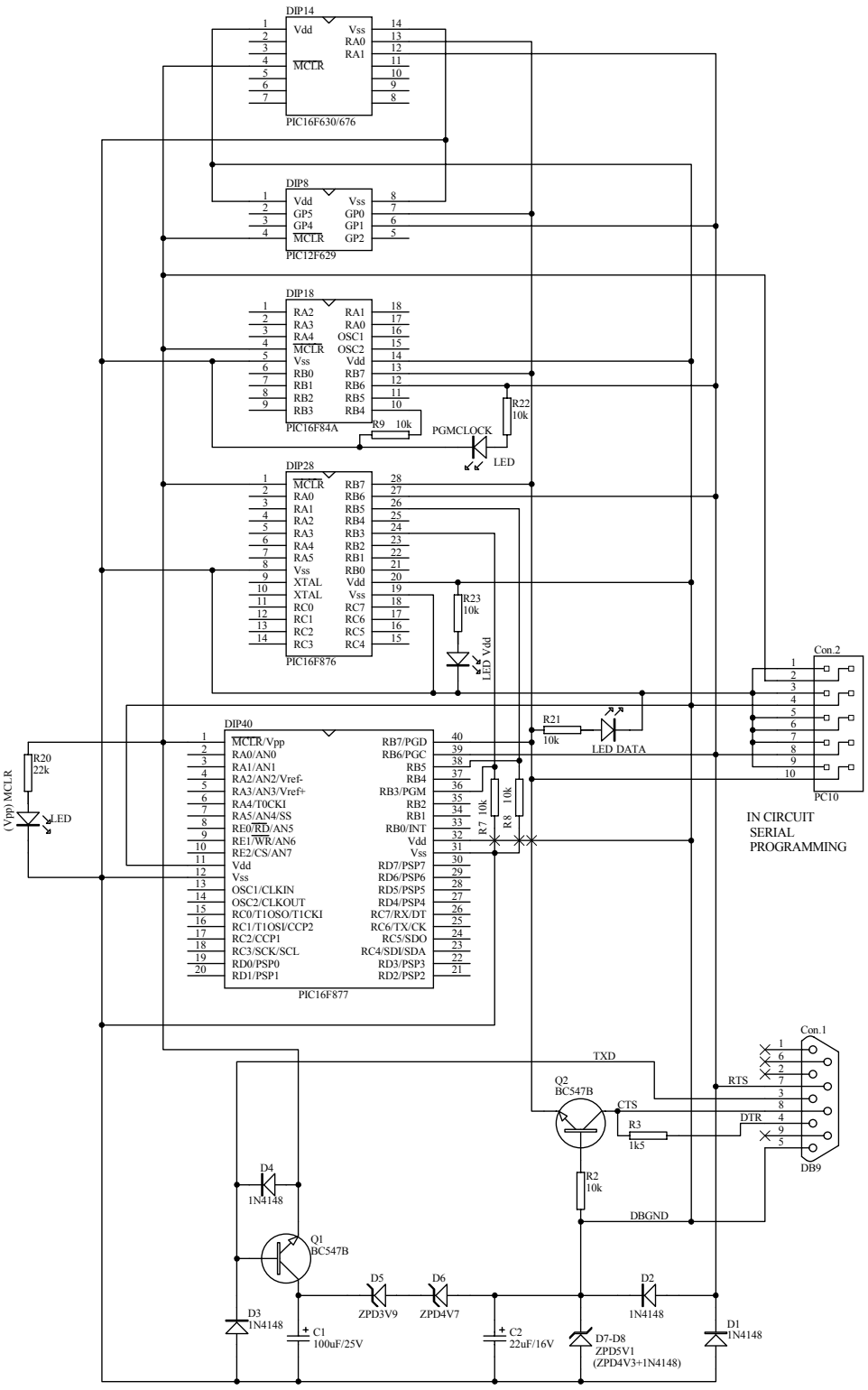

Title	MICRO PROGRAMMER MP-1	
Size A3	Number www.audiohms.com	Revision